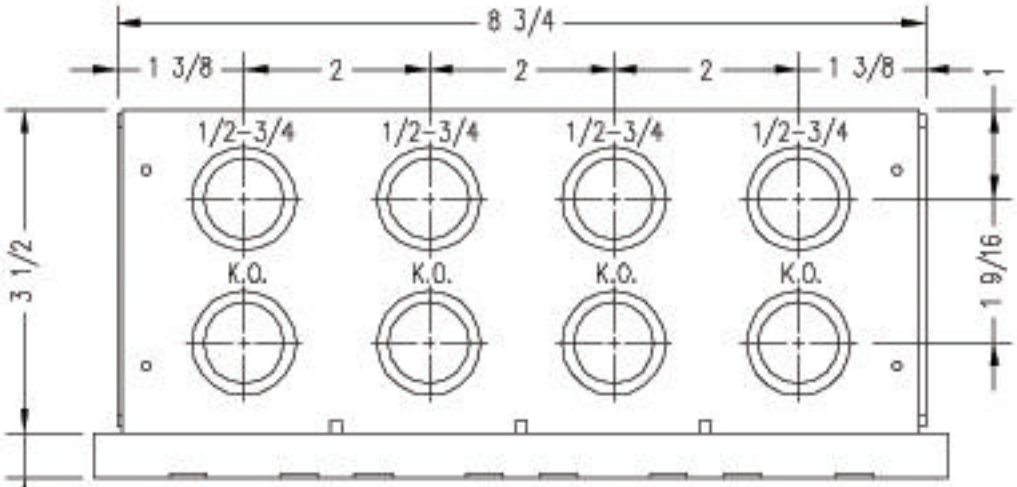

END VIEW

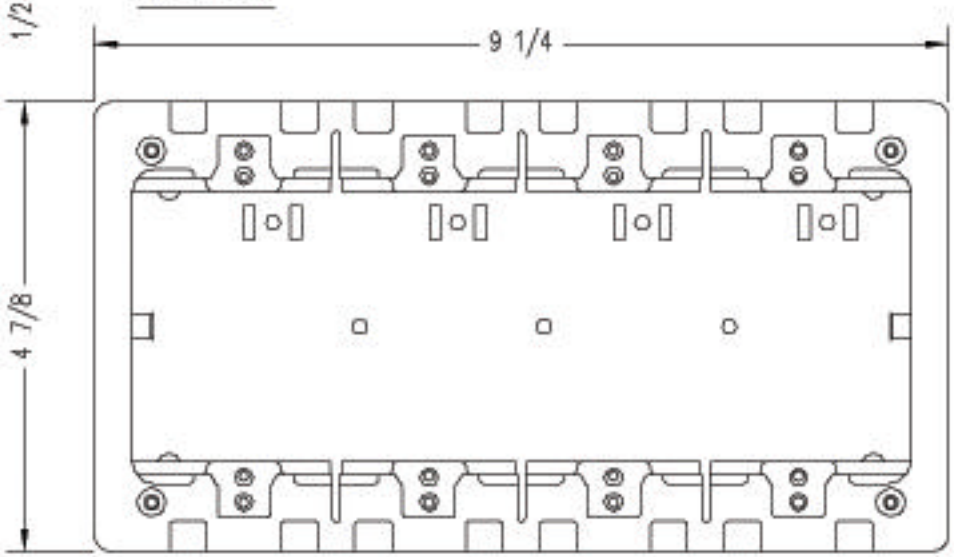

FRONT VIEW

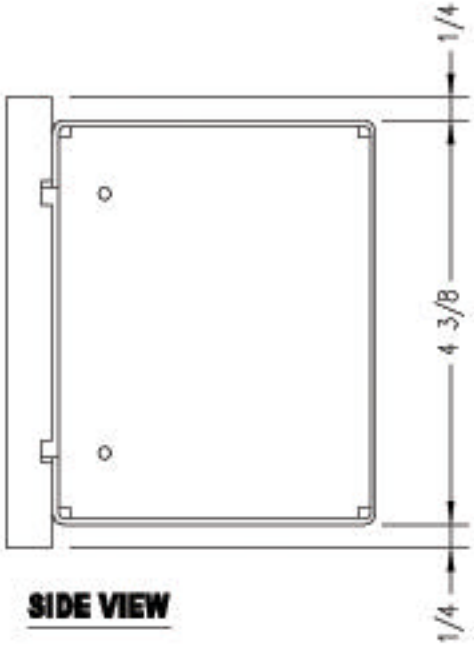

SIDE VIEW

PATENT PENDING

PRINTED IN CANADA

SPIDER MANUFACTURING INC.
(AN ISO 9001 COMPANY)

TEL: (250) 765-2616
FAX: (250) 765-2614

WEB SITE: www.spidermfg.com
E-MAIL: sales@spidermfg.com

FOUR GANG MASONARY BLOCK ROUGH IN SPIDERBOX

CAT. No.
WSCS-4-MBD